POS. NO.	DESCRIPTION	MATERIAL	QTY
1	modified flange DN50 KF	1.4301 (304)	1
2	high density feedthrough 26 pin	Stainless Steel	2

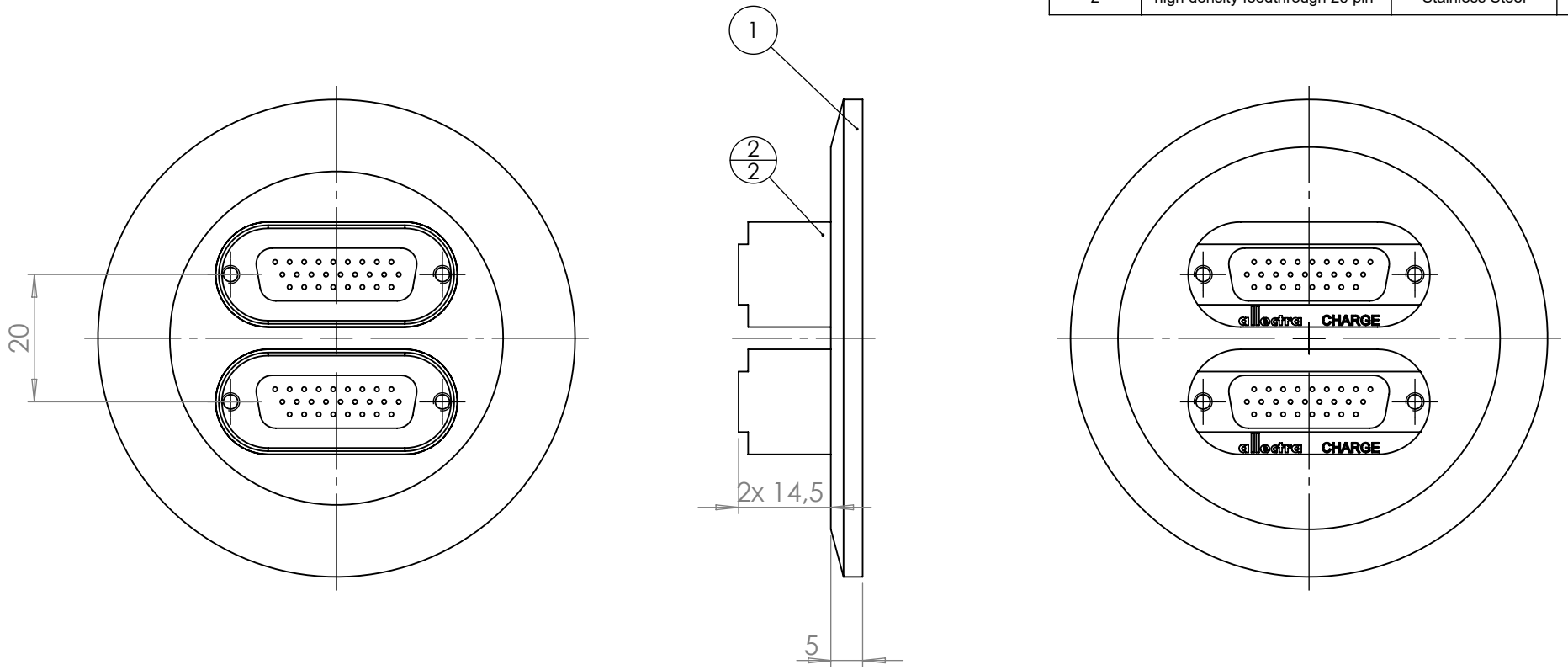

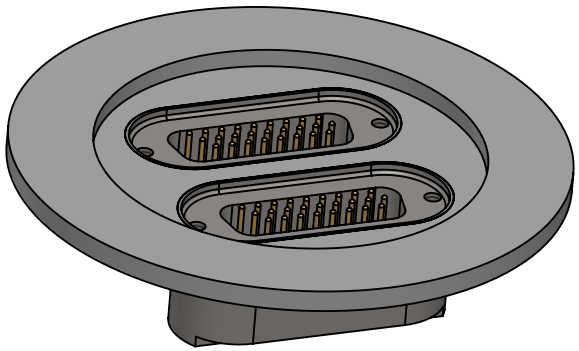

<1 E-9 mbar*l/sec, He, according to DIN EN 1779-A3
Definition Leckprüfung (definiton leak check)

Zeichnung Nutzung (SCOPE OF DRAWING): Drawing external usage for customer

All informations provided in this drawing is considered to be confidential, proprietary and secret information. It is intended only for the use of individual or entity to whom it is sent. Individdual or entity agrees to not disseminate or copy this information to anyone other than originally specified without the written consent Allectra GmbH.

Prüfung Zubehör. (CON + HSG CHECK): UHV-HSG=50

Werkstoff (MATERIAL):

Gewicht (WEIGHT): g

Oberfläche (SURFACE): Cleaned HV- Compatible

Bemerkung (REMARKS)

Toleranz (TOLERANCE): DIN EN ISO 13920-C (welding ASSY)

Kanten (EDGES)

PROJECTION

Maßstab (SCALE):	Format. (FORM)	PAGE NO	PAGES	Rauheit (ROUGHNESS)
1:1	A4	1	1	

origin		
name	Allectra standard	
(drw/doc/sketch)		
date	27.01.2025	REV

REV	Beschreibung (CHANGING)
00	first origin

	DATE	NAME
Design	27.01.2025	AD
Drawn	27.01.2025	AD
Check	27.01.2025	JB
Approv	27.01.2025	AD

allectra

gesp. am (SAVE DAT.): 27.01.2025

Benennung (DESCRIPTION):

2 off 26 pin high density SUB- D/t

on flange DN50 KF

Zeich. Nr. (Drw. No.): 210-HD26-K50-2

REV 00

Art. Nr. (PART NO.) 210-HD26-K50-2