POS-NR.	DESCRIPTION	MATERIAL	QTY
1	modified flange DN40 KF	1.4301 (304)	1
2	coaxial f/t type BNC, double sided, 500V, 3A, grounded shield, weldable		1

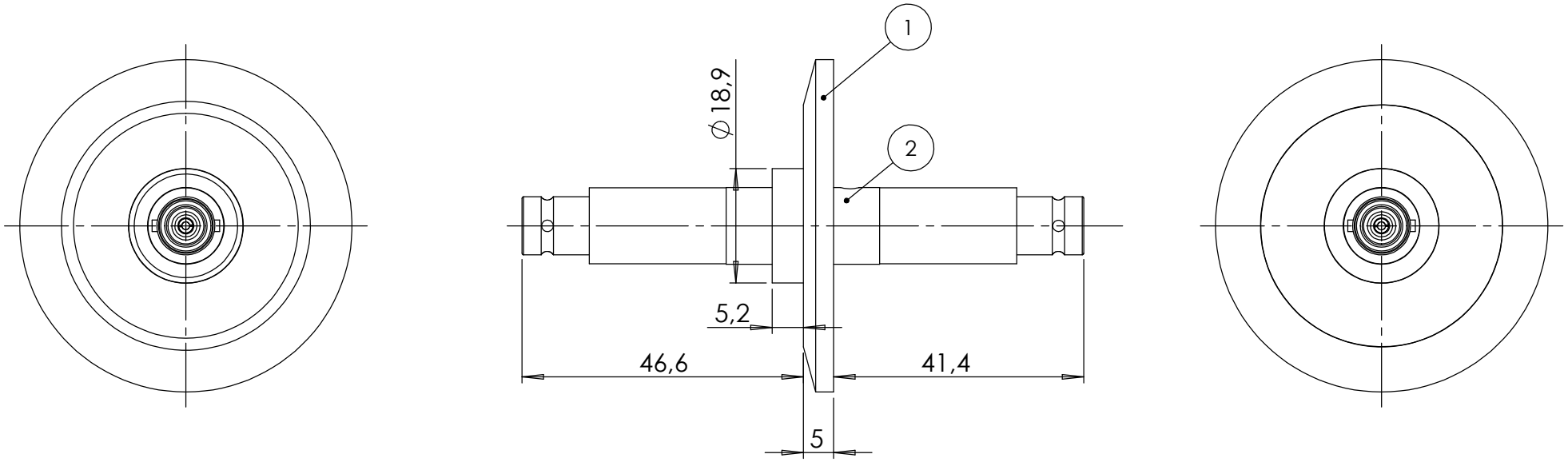

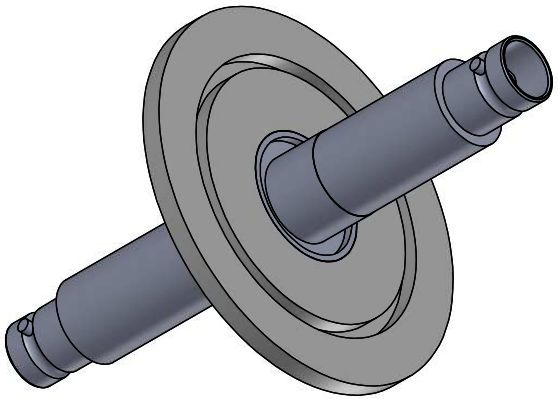

air side connector included

Bemerkungen
(Remarks)

All informations provided in this drawing is considered to be confidential, proprietary and secret information. It is intended only for the use of individual or entity to whom it is sent. Individual or entity agrees to not disseminate or copy this information to anyone other than originally specified without the written consent Allectra GmbH.

Freimaßtoleranz
(Standard Tolerance)

Maßstab
(Scale)
1:1

Rauheit (Roughness)

europ.Projektion

Material, Standard
Oberfläche
(Treatment)

Kanten (edges)

	Datum	Name
Design	24.11.2022	AD
Drawn	24.11.2022	AD
Check		

Bezeichnung
(Title)

1 off coaxial f/, type BNC, double sided

on flange DN40 KF

Gewicht
(weight) g

Page: 1 Pages: 1

Index	Modification	Date	Name

allectra

Zeichnungsnummer
(Drawing No.) 241-BNCD-K40

Revision

Datei (File) C:\PDMstore\C:\PDMstore\

Format A4