| POS-NR. | DESCRIPTION | MATERIAL | QTY |
|---|---|---|---|
| 1 | Countersunk Screw M2X14 | Stainless Steel | 2 |
| 2 | front plate for SUB-D 25 Pin | AL2O3 | 1 |
| 3 | Slotted Cheese Screw 4-40 UNC | 1.4301 (X5CrNi18-10) | 2 |
| 4 | back plate for SUB-D 25 pin | AL2O3 | 1 |
| 5 | Hexagon Nut M2 DIN934 | Stainless Steel | 2 |

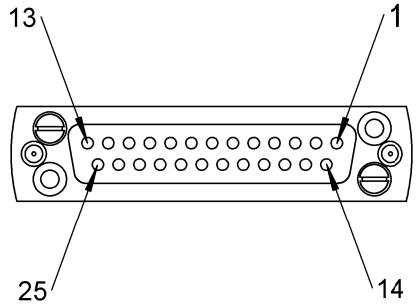


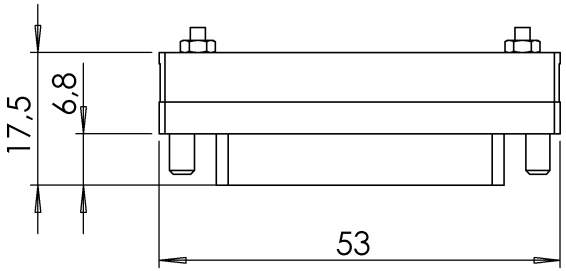


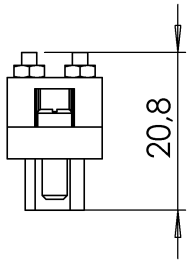


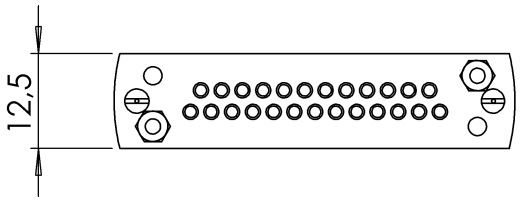


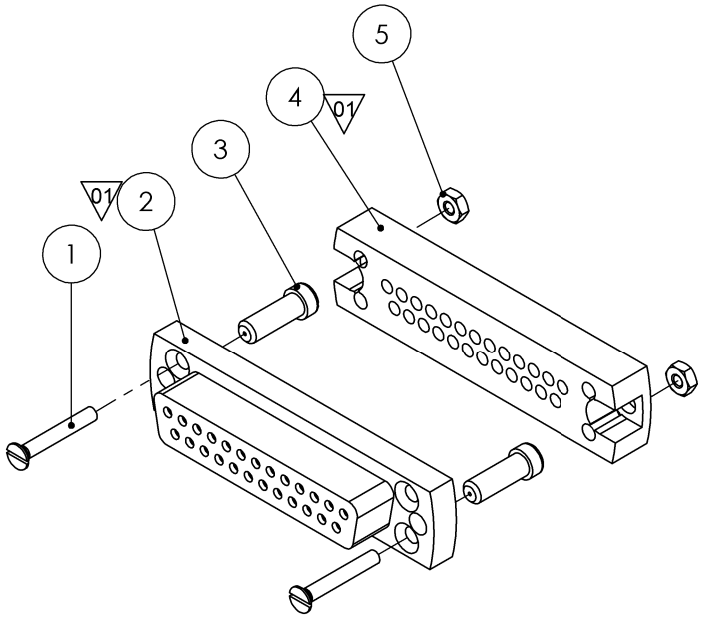


Bemerkungen (Remarks)

All informations provided in this drawing is considered to be contidential, proprietary and secret information. It is intended only for the use of individual or entity to whom it is sent. Individual or entity agrees to not disseminate or copy this information to anyone other than originally specified without the written consent Allectra GmbH.

Freimaßtoleranz (Standard Toleranz)

Maßstab (Scale): 1:1

Rauheit (Rougness)

europ. Projektion

Material, Standard Oberfläche (Treatment)

Kanten (edges)

| | Datum | Name |
|---|---|---|
| Design | 23.05.2014 | JB |
| Drawn | 24.03.2020 | AD |
| Check | | |

Bezeichnung (Title): UHV connector 25 pin (female) standard SUB-D

Gewicht (weight): 35.54 g

Page: 3 Pages: 6

Zeichnungsnummer (Drawing No.): 211-FS25-UHV

Revision: 01

| Index | Modification | Datum | Name |
|---|---|---|---|
| 01 | old: glass ceramic | 24.03.2020 | AD |

allectra

Datei (File) C:\PDM-Store\C:\PDM-Store\

Format A4