POS-NR.	DESCRIPTION	Material	QTY
1	Front Plate for SUB-D 9 Pin	PEEK	1
2	Back Plate for SUB-D 9 Pin	PEEK	1
3	Hexagon Nut M2 DIN934	Stainless Steel	2
4	Countersunk Screw M2x20	Stainless Steel	2
5	hexagon nut M2.5	Stainless Steel	2
6	Screw M2.5 x 30	Stainless Steel	2

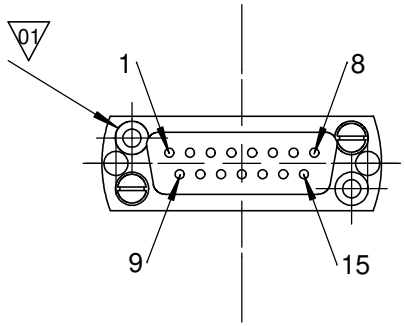

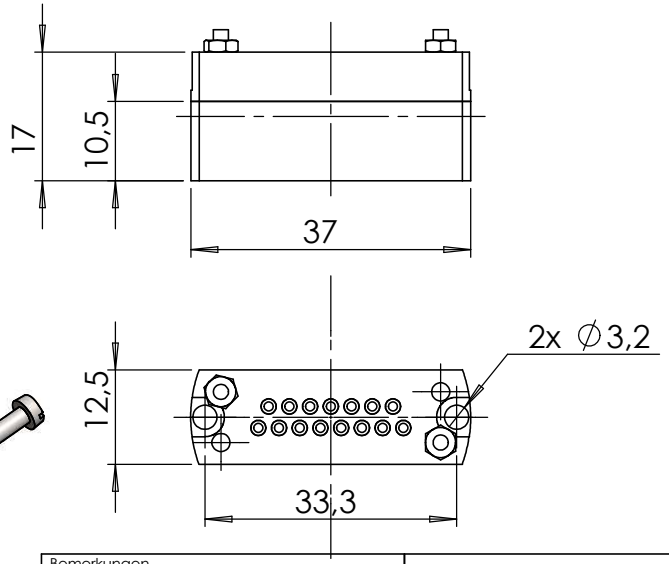

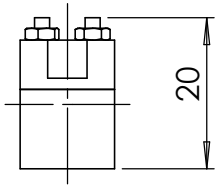

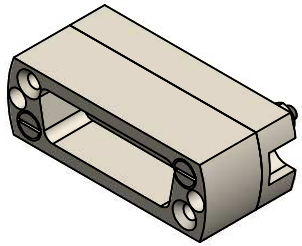

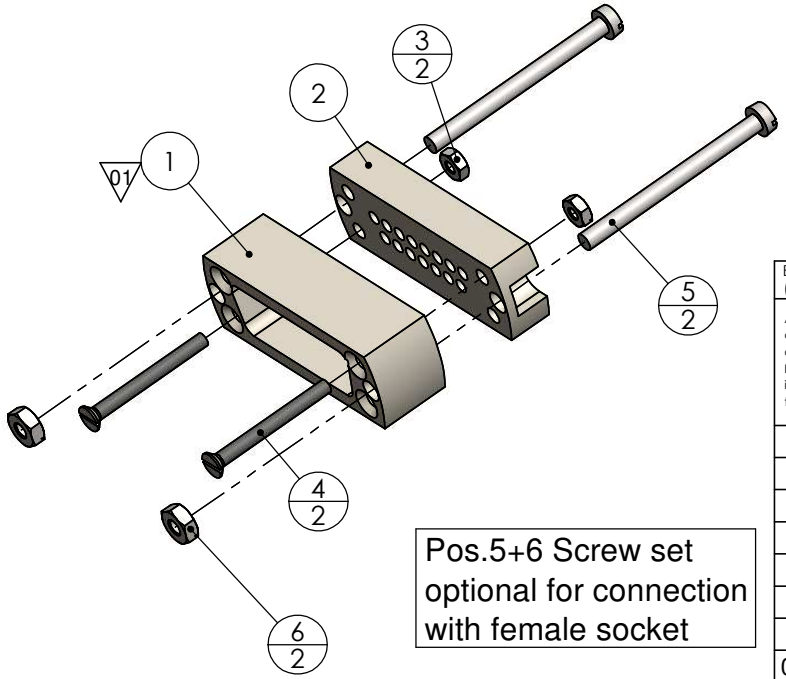

Pos.5+6 Screw set optional for connection with female socket

Bemerkungen (Remarks)

All informations provided in this drawing is considered to be confidential, proprietary and secret information. It is intended only for the use of individual or entity to whom it is sent. Individual or entity agrees to not disseminate or copy this information to anyone other than originally specified without the written consent Allectra GmbH.

Freimaßtoleranz (Standard Toleranz)

Maßstab (Scale): 1:1

Rauheit (Rougness)

europ.Projektion

Material, Standard Oberfläche (Treatment)

Kanten (edges)

	Datum	Name
Design	28.02.2014	JB
Drawn	29.11.2022	AD
Check		

Bezeichnung (Title)

UHV connector 15 pin (male)

Standard SUB-D

Gewicht (weight): 11.30 g

Page: 2 Pages: 7

Zeichnungsnummer (Drawing No.): 211-MS15-PK

Revision: 01

Datei (File): C:\PDMstore\C:\PDMstore\

Format A4

Index	Modification	Datum	Name
01	front plate neu design	29.11.2022	AD