POS-NR.	DESCRIPTION	Material	QTY
1	Front Plate for SUB-D 15 Pin	AL2O3	1
2	back plate for SUB-D 15 pin	AL2O3	1
3	Hexagon Nut M2 DIN934	Stainless Steel	2
4	Countersunk Screw M2x20	Stainless Steel	2
5	hexagon nut M2.5	Stainless Steel	2
6	Screw M2.5 x 30	Stainless Steel	2

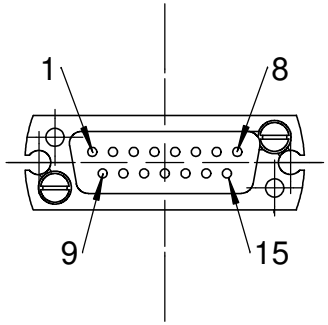

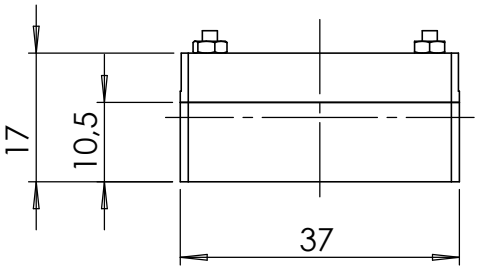

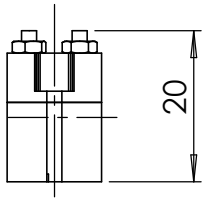

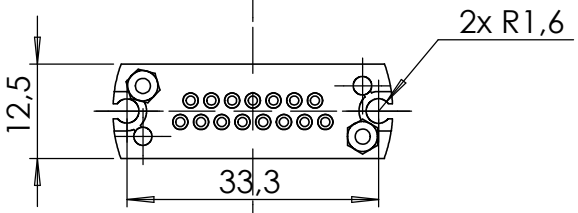

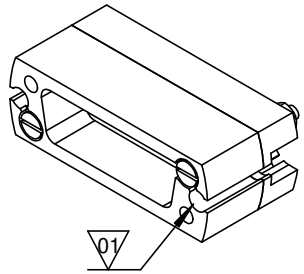

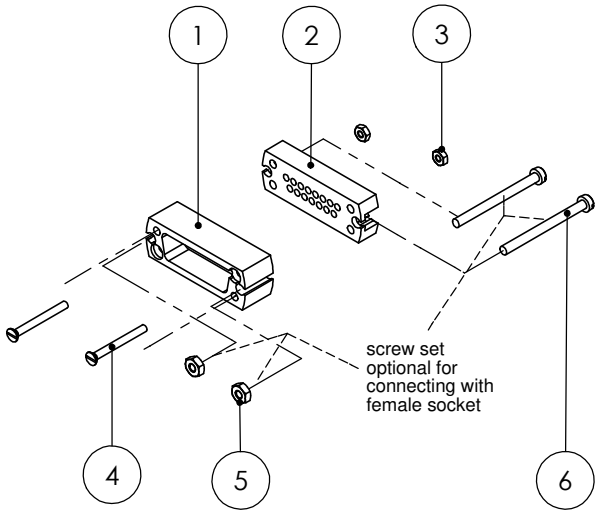

Bemerkungen
(Remarks)

All informations provided in this drawing is considered to be confidential, proprietary and secret information. It is intended only for the use of individual or entity to whom it is sent. Individual or entity agrees to not disseminate or copy this information to anyone other than originally specified without the written consent Allectra GmbH.

Freimaßtoleranz
(Standard Toleranz)

Maßstab
(Scale)
1:1

Rauheit (Rougness)

europ.Projektion

Material, Standard
Oberfläche
(Treatment)

Kanten (edges)

	Datum	Name
Design	16.06.2014	JB
Drawn	07.11.2022	AD
Check		

Bezeichnung
(Title)

UHV connector 15 pin (male)

standard SUB-D

Gewicht
(weight)
24.56 g

Page: 2
Pages: 8

Index	Modification	Datum	Name
01	new design	07.11.2022	AD

allectra

Zeichnungsnummer
(Drawing No.)
211-MS15-UHV

Revision
01

Datei (File) C:\PDMstore\C:\PDMstore\

Format A4