POS-NR.	DESCRIPTION	MATERIAL	QTY
1	modified flange DN40 KF	1.4301 (X5CrNi18-10)	1
2	19 pin Feedthrough	Stainless Steel	1

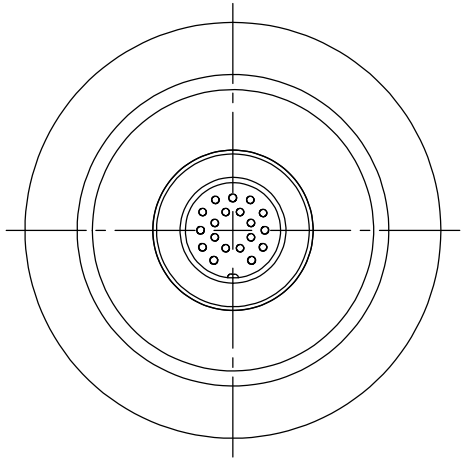

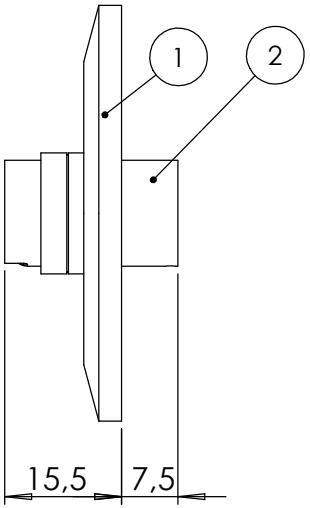

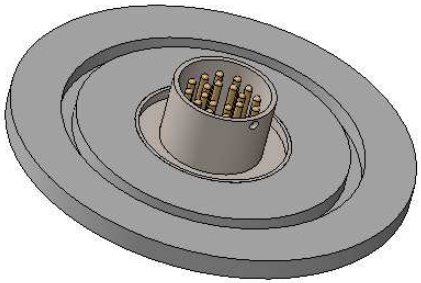

Bemerkungen
(Remarks)

All informations provided in this drawing is considered to be confidential, proprietary and secret information. It is intended only for the use of individual or entity to whom it is sent. Individdual or entity agrees to not disseminate or copy this information to anyone other than originally specified without the written consent Allectra GmbH.

Freimaßtoleranz
(Standard Toleranz)

Maßstab
(Scale)
1:1

Rauheit (Rougness)

europ.Projektion

Material, Standard
Oberfläche
(Treatment)

Kanten (edges)

	Datum	Name
Design	01.11.2016	JB
Drawn	01.11.2016	JB
Check		

Bezeichnung
(Title)

circular miniature 19pin f/t

on flange DN40 KF

Gewicht
(weight) g

Page: 1 Pages: 1

allectra

Zeichnungsnummer
(Drawing No.) 220-CM19-K40

Revision

Index	Modification	Datum	Name

Datei (File) C:\PDMStore\C:\PDMStore\

Format A4