POS-NR.	DESCRIPTION	MATERIAL	QTY
1	Modified Flange DN40 CF	1.4404	1
2	Coaxial F/T BNCD50	Stainless Steel	2

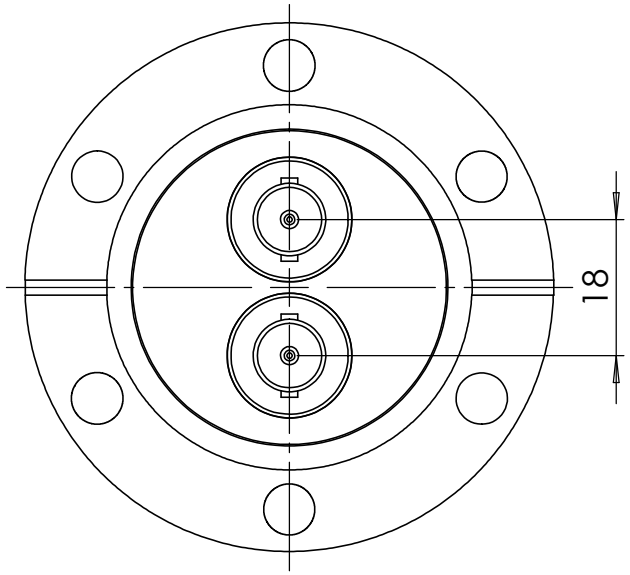

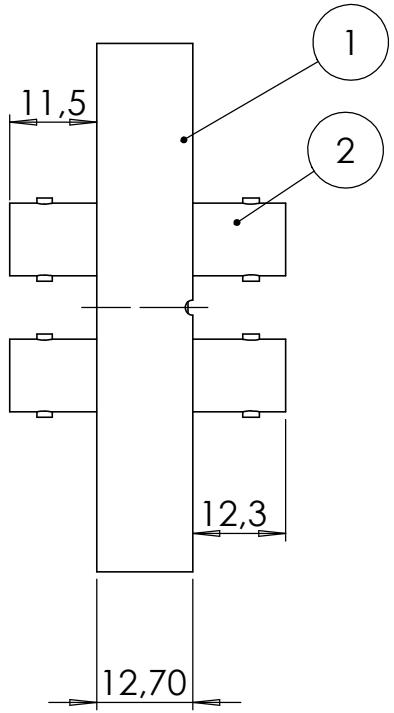

including Air Side Connectors

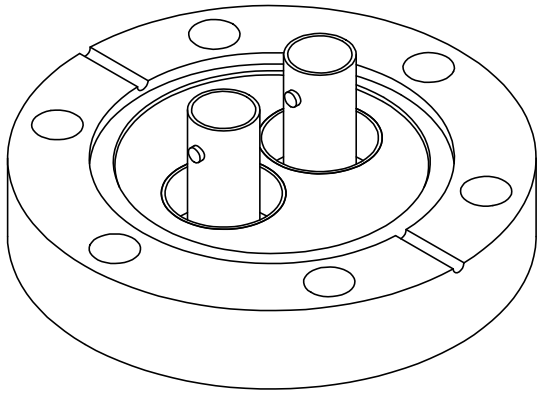

Bemerkungen
(Remarks)

All informations provided in this drawing is considered to be confidential, proprietary and secret information. It is intended only for the use of individual or entity to whom it is sent. Individdual or entity agrees to not disseminate or copy this information to anyone other than originally specified without the written consent Allectra GmbH.

Freimaßtoleranz
(Standard Toleranz)

Maßstab
(Scale)
1:1

Rauheit (Rougness)

europ.Projektion

Material, Standard
Oberfläche
(Treatment)

Kanten (edges)

	Datum	Name
Design	26.11.2014	JB
Drawn	26.11.2014	JB
Check		

Bezeichnung
(Title)
2 of BNCD50 F/T
on flange DN40 CF

Gewicht
(weight)
g
320.90

Page: 1
Pages: 1

Index	Modification	Datum	Name

allectra

Zeichnungsnummer
(Drawing No.)
242-BNCD50-C40-2

Revision

Datei (File) C:\PDMStore\C:\PDMStore\

Format A4