POS. NO.	DESCRIPTION	MATERIAL	QTY
1	SHV connector female, RG58, modified	Silver plated	1
2	viton tube 5x5 internal for SR	VITON	1
3	viton tube 3x22, external for SR	VITON	1

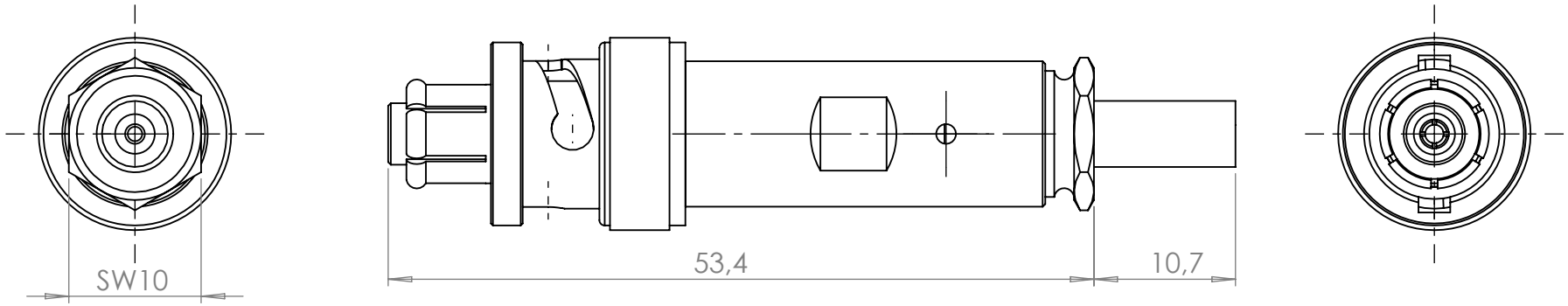

SCALE 1 : 1

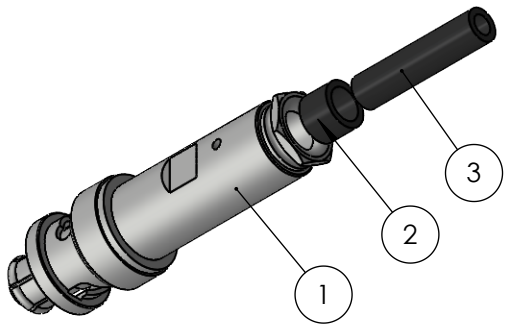

no leakcheck required
Definition Leckprüfung (definiton leak check)

Zeichnung Nutzung (SCOPE OF DRAWING)
Drawing external usage for customer

All informations provided in this drawing is considered to be confidential, proprietary and secret information. It is intended only for the use of individual or entity to whom it is sent. Individdual or entity agrees to not disseminate or copy this information to anyone other than originally specified without the written consent Allectra GmbH.

Verwendetes Material (USED MATERIAL)

Werkstoff (MATERIAL): Gewicht (WEIGHT): g

Oberfläche (SURFACE)
Cleaned UHV- Compatible

Bemerkung (REMARKS)

Toleranz (TOLERANCE)

Kanten (EDGES): +0,1 -0,25

PROJECTION

Maßstab (SCALE): 2:1 | Format. (FORM): A4 | PAGE NO 1 | PAGES 1 | Rauheit (ROUGHNESS): Rz 16 (Rz 6.3)

origin: name: Allectra standard; (drw/doc/sketch); date; REV

	DATE	NAME
Design	22.03.2024	JB
Drawn	09.09.2025	AD
Check	10.09.2025	JB
Approv	10.09.2025	AD

REV	Beschreibung (CHANGING)
00	first origin

gesp. am (SAVE DAT.): 10.09.2025

Benennung (DESCRIPTION):
SHV coaxial connector (female)
5A/5kV, RG174 (KAP50)

Zeich. Nr. (Drw. No.): 245-CON-SHV

REV 00

Art. Nr. (PART NO.) 245-CON-SHV